A PRACTICAL GUIDE TO KUUL EVOLUTION™ EVAPORATIVE COOLING MEDIA MAINTENANCE AND SERVICE

KUUL EVOLUTION™ SERIES
EVAPORATIVE COOLING MEDIA

EXPERIENCE THE KUUL EVAPORATIVE TECHNOLOGIES EFFECT

WWW.THEKUULEFFECT.COM

Copyright 2021 © Portacool, LLC
PARKULLT071

TABLE OF CONTENTS

This maintenance guide is intended to provide Kuul Evolution™ evaporative media users with practical steps for proper product maintenance. Proper maintenance will ensure maximum efficiency and extended media lifespan.

SECTION		PAGE
1	**Introduction to evaporative cooling**	4
1.1	The evaporative cooling process	4
1.2	High efficiency and low pressure drop	4
2	**Water consumption**	5
2.1	Calculating the evaporation rate	5
2.2	Bleed off, managing scale and dosing	7
2.2.1	pH of water and concentration of dissolved salts	8
2.2.2	The cost of bleed-off vs. replacing evaporative media	9
2.2.3	Dosing feed-water to reduce pH and reduce calcium scale deposits	9
2.3	Evaluating your water	9
2.3.1	Water pressure and well/borehole/reservoir capacity	9
2.3.2	Quality of water	10
3	**Water circulation requirements and planning**	10
3.1	Kuul evaporative media water needs	10
3.1.1	Water for evaporation and washing the evaporative media	10
3.1.2	Supplying water evenly	11
3.1.3	Table of water supply requirements	11
3.2	Specifying a pump for your system	13
3.3	Installation best practices	14
4	**Good installation practices - factors influencing a long, usable lifespan**	15
4.1	Proximity to sources of contaminants	15
4.2	On-off cycling of evaporative media	15
4.3	Washing cycles for evaporative media	15
4.4	Flushing systems, recirculated water filtration	15
4.5	Preventing algae growth on evaporative media	16
5	**Automatic water dosing systems to extend media lifespan**	16
5.1	Scale control	16
5.2	Algae and bacterial control	17
6	**Monthly maintenance needs**	17
6.1	Water flow and distribution check	17
6.2	Filtration check	17
6.3	Check for organic and calcium salt deposits	18
6.4	Flushing the system and checking the water quality	18
6.5	If the pH is high	18
6.6	If the pH is neutral	18
6.7	Shock dosing the water for scale and algae control	18

Copyright 2021 © Portacool, LLC

SECTION PAGE

7 Treatment of old evaporative media – cleaning and maintenance 19
7.1 Algae treatment 19
7.2 Treatment for scale/calcium deposit 20

8 Aggressive and toxic cleaning agents 20

9 Recommendations for your Kuul Evolution™ evaporative media systems 21

10 Circulation water requirements table for Kuul® evaporative media 22

11 Algaecide and de-scaling dosing requirement table 22

12 Replacement considerations 23

13 Dry and wet weight/density for Kuul evaporative media 23

Copyright 2021 © Portacool, LLC

1 INTRODUCTION TO EVAPORATIVE COOLING

1.1 The evaporative cooling process

When water evaporates into the air, the heat required to change water from a liquid to a gas, is extracted from the air. The absorption of energy in the form of heat coincides with the natural law where energy cannot be created or destroyed. The natural process of evaporation removes heat from the air, which results in cooler and more humid air.

The unique design of Kuul Evolution™ evaporative media, combined with superior materials, allows water evaporation to be maximized in the smallest space and shortest time.

Ideally, the air to be cooled is pulled evenly through the evaporative media.

Water should be pumped to the top of the evaporative media and distributed evenly across the top of the evaporative media. With the assistance of gravity, the water is pulled downward and flows through the media. The evaporative media will absorb the water and, in turn, facilitate water molecule evaporation into the air.

More water than is required for evaporation (cooling) is pumped to the top of the media for even distribution. This extra water is used for cleaning the media and will return to the reservoir to be recirculated.

1.2 High efficiency and low pressure drop

Kuul evaporative media utilizes unique design to ensure low air-pressure drop when air is pulled through the media. This has substantial benefits in reduced fan energy consumption and reduced strain on ventilation equipment.

In addition to the low pressure drop, higher performance from a smaller system is possible with Kuul evaporative media. The high evaporation efficiency allows engineers and system designers to reduce the size of the evaporative system used.

Good maintenance is required to keep both of these important attributes performing as they should.

While Kuul evaporative media has proven to be extremely tough and resilient over decades of use, good maintenance is key for a long lifespan.

Poor water quantity, insufficient water supply, chemicals in the water and lack of cleaning may damage the media's performance.

Copyright 2021 © Portacool, LLC

2 WATER CONSUMPTION

When designing the water systems, planning the quantity of water required to run your evaporative cooling system is equally as important as evaluating the water quality.

Water consumed = Evaporation [gallons/hour] + Bleed-off [gallons/hour]

2.1 Calculating the evaporation rate

Water evaporated into the air can be exactly calculated with the use of a few simple formulas.

You will need access to the following input parameters to get an accurate figure of how much water you can expect to evaporate.

- How much air flow will pass through the media?
- What surface area of media in ft² is being used (i.e., the width and height of the system)?
- What air velocity have you chosen to pass through the media in fpm?
- What media type have you chosen (each media has its own set of efficiency curves)?
- What is the depth of the media?
- What is the ambient dry-bulb temperature (DBT) in °F?
- What is the corresponding relative humidity in percent (%) at the same time as the temperature is measured and the corresponding wet-bulb temperature (WBT) in °F?

EXAMPLE:

An air-handling unit system uses a system fan delivering 53,000 CFM, has a cooling media system of eleven feet in width and 9 feet in height, resulting in an air speed of 535 fpm. Using the evaporation efficiency percentage of the Kuul Evolution FirePro™ evaporative media at an example of 93.0% and 12″ depth we can calculate the final conditions of the air with the help of a psychrometric table.

Copyright 2021 © Portacool, LLC

KUUL EVOLUTION FIREPRO EVAPORATIVE MEDIA EVAPORATION EFFICIENCY AND PRESSURE DROP

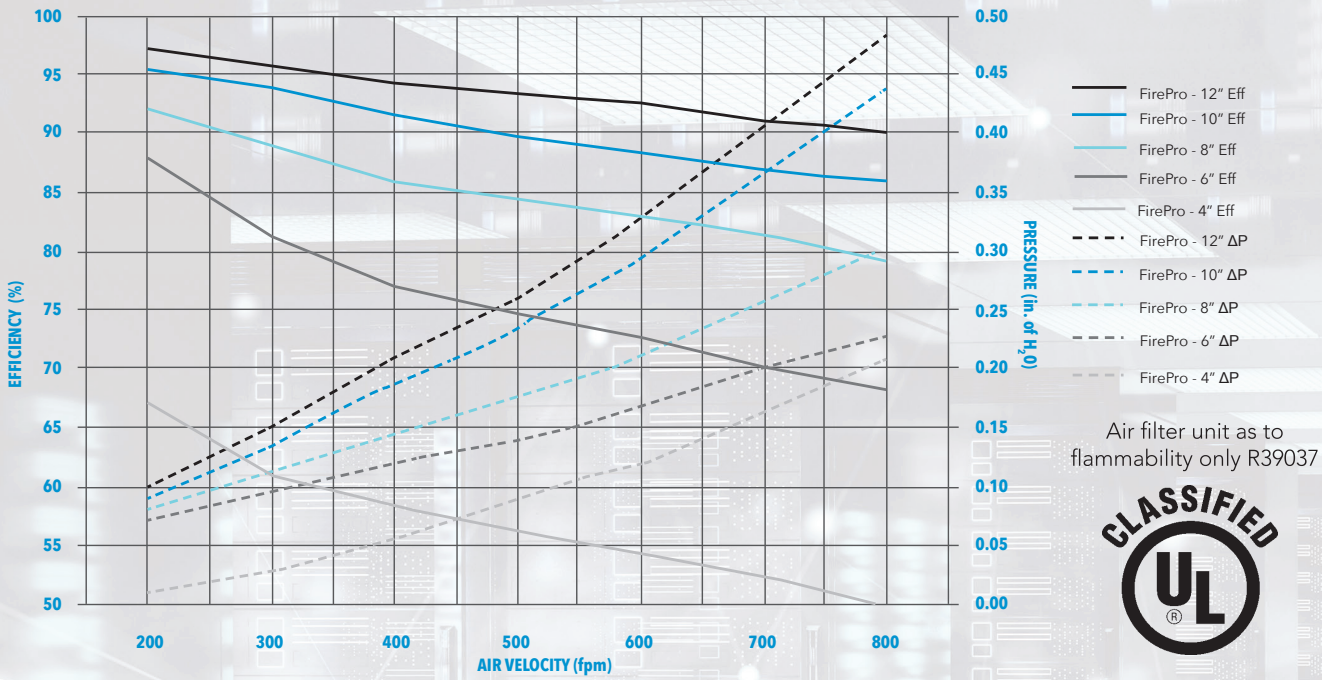

Air filter unit as to flammability only R39037

CLASSIFIED UL

* Be sure to visit **www.thekuuleffect.com** for the latest efficiency graphs

The temperature of air leaving the media is calculated as:

$$T_{leaving} = DBT - (DBT\text{-}WBT)*EFF$$

- DBT is dry bulb temperature. For this example, assume DBT = 100 °F.
- In this example, WBT is the wet bulb temperature at 1,000 ft. above sea level. This must be calculated using a psychrometric table. Based on an example relative humidity (RH) of 40%, then WBT = 79 °F, or your weather bureau may give you your DBT and corresponding WBT.

$$T_{leaving} = 100 - (100\text{-}79)*93\% = 80.5°F$$

- Outlet air humidity can be calculated using a psychrometric chart, WBT and $T_{leaving}$. In this example, the inlet air is 100 °F and 40% RH and the outlet air is 80.5 °F, which would then be at 93.9% RH.

• The performance data shown above is independently tested and verified by a third party under required, stringent testing conditions.
• Due to external factors including, but not limited to, installation practices, maintenance practices, water quality, humidity and ambient temperature, results may vary.
• The performance data shown above is based on wet media in optimal environmental conditions.

Copyright 2021 © Portacool, LLC

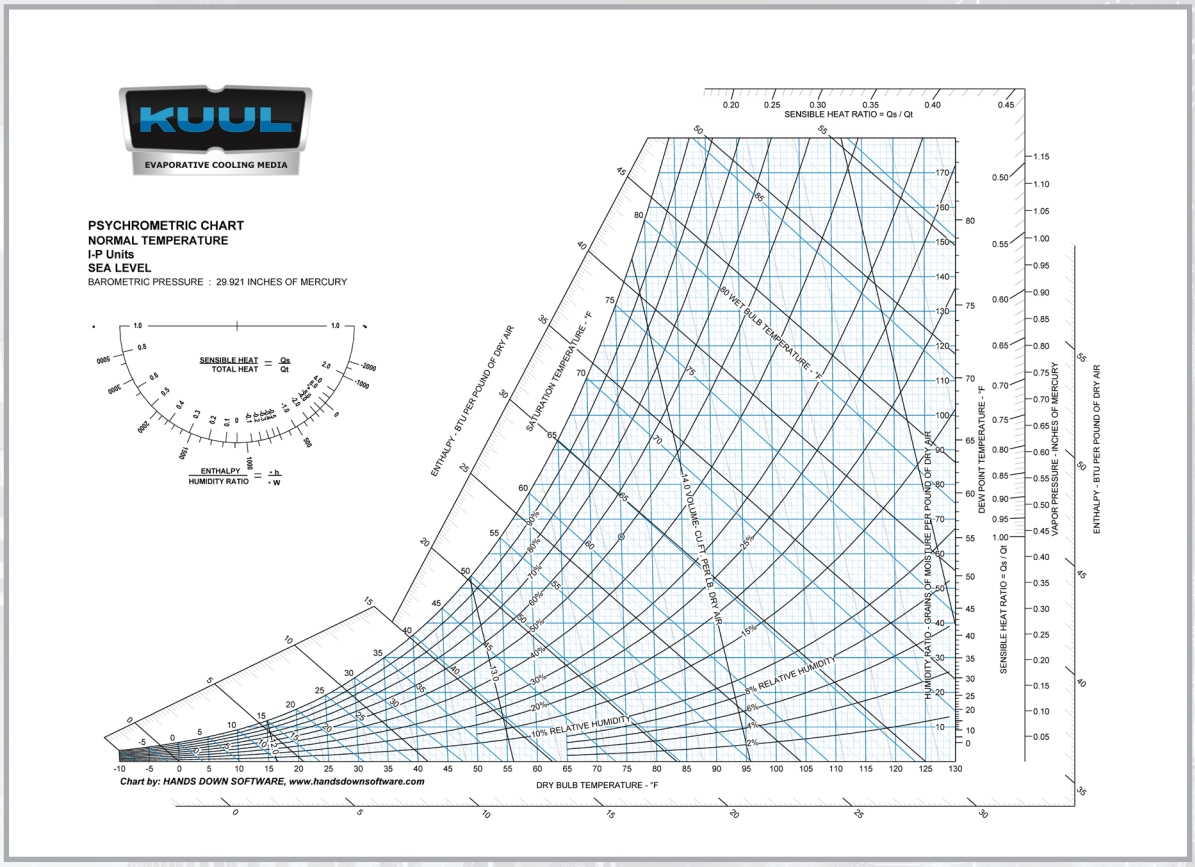

- Using a psychrometric chart to find the absolute humidity of the air entry and the $T_{leaving}$, in $lb_w/lb_{dry\ air}$, then the amount of water absorbed by the air can be calculated using the following formula;

Evaporation = airflow (CFM) x ρ_{air} x (abs humidity entry – abs humidity leaving)

= 53000 x 0.06991 x (0.02198 – 0.01734)

= 17.19lb w/min = 2.06 gallons/min = 124 gallons per hour

** Assuming one gallon of water weights 8.345378 lb*

This means 124 gallons of water per hour would be evaporated into the air.

2.2 Bleed off, managing scale and dosing

Natural water contains salts and has either an acidic or basic percentage of Hydrogen (pH). For our own consumption, typical good quality water has a neutral pH (neither acidic nor basic) and has less than 100 ppm of dissolved salts (e.g., calcium, sodium, potassium, etc.).

The water we have available for use in our evaporative systems needs to be evaluated on how much salt in various forms is dissolved in suspension.

Copyright 2021 © Portacool, LLC

EXAMPLE:

For every 50 gallons of spring water with 150 ppm of dissolved salts that is fully evaporated, one ounce of salts is left behind. This is the compound that forms scale on your evaporative media.

In the example system above, with 53,000 CFM of air-flow, the 124 gallons per hour of evaporated water would produce 2.47 oz. of salts per hour. These salts will accumulate in concentration within the recirculation water found in the sump/reservoir.

To deal with this accumulation, a process known as "bleed-off" is required. Bleed off dilutes this salt concentration to a point that prevents scale build-up. Removing, or bleeding-off, some of the highly concentrated water and replacing it with weaker 150 ppm fresh make-up water will aid in scale build-up prevention.

How much bleed-off needed is dependent on the chemistry of your make-up or supply water.
You will need to know the following about your water:

- The pH of your water
- The calcium salt concentration in ppm
- The hardness of your water in $CaCO_3$ ppm
- The alkalinity of your water in $CaCO_3$ ppm
- The TDS conductivity of your water in ppm

You can consult your nearest water analysis lab to determine the exact chemistry of your make-up and supply water.

Contact kuulsupport@portacool.com for assistance on determining how much bleed-off water is required to prevent scale build up.

2.2.1 pH of water and concentration of dissolved salts

The pH of water is an extremely important aspect of water quality. Neutral pH, which is safe for our bodies to consume, would fall between 6.5 to 7.5 pH, although commercial mineral waters often range from 5.5 to 8 pH.

Low pH, or acidic waters less than 6.5, can be toxic with dissolved metals such as iron, copper, lead and zinc. These waters are generally corrosive to metals and damaging to metal-based water systems. Ironically, evaporative media can withstand mildly acidic water.

High pH water, or basic water above 7.5, does not damage metals but the presence of calcium salts is common in water above 8.5. This is considered hard water and contributes to lime or calcium scaling of metal-based water systems and evaporative media.

Copyright 2021 © Portacool, LLC

Generally, a high pH, coupled with calcium salts in suspension, will cause calcium scale deposits on evaporative media. Reducing the pH of the supply water is an option, as this reduces the point at which scale forms. High pH water is not only damaging to evaporative media performance because of scale formation, but a pH higher than 9 is damaging to the natural fibers found in the evaporative media.

2.2.2 The cost of bleed-off vs. replacing evaporative media

While water is a precious resource, the need for diluting sump/reservoir water salt concentration is an important financial decision.

Lime scale build-up:

- Reduces cooling capacity of the evaporative media
- Increases pressure drop of air through the evaporative media increasing fan energy/electrical cost

Typically when calcium or lime scale has fouled the surface area of the evaporative media, the cost of new evaporative media is paid for within a short time from the savings on fan energy.

2.2.3 Dosing feed-water to reduce pH and reduce calcium scale deposits

With a high concentration of calcium salts and high pH, scale will easily form. If pH is reduced, the risk of scale formation is reduced even when a high concentration of calcium salts exists.

It, therefore, becomes viable to dose feed-water that naturally has a high pH – 9.0 or higher – down to 7.5 to reduce the onset of scale formation. The cost of the acid used to bring down the pH levels and the dosing system would generally pay for itself when considering this investment would alleviate three or four total evaporative media changes over the 12-15 year lifecycle of a dosing system.

2.3 Evaluating your water

As well as planning for your peak water consumption needs, it is also vital to ensure the quality of your water is checked prior to designing your evaporative system.

2.3.1 Water pressure and well/borehole/reservoir capacity

As shown in the previous example with one AHU system, the water evaporated was 124 gallons per hour per AHU. For ten AHUs in peak summer it is possible to consume as much as 10,000 gallons of water per day just supplying the evaporative cooling systems with the water they require.

It is important to plan for the size of your water supply carefully, and if needed, to build a storage reservoir to hold water for a few days in the event your water supply fails.

The supply water pressure to the individual evaporative cooling systems at each installation point must exceed 70 psi to ensure the pumps at each system do not starve.

Copyright 2021 © Portacool, LLC

2.3.2 Quality of water

The water available for your system needs to be evaluated prior to completing the design of your water supply system and network.

If well/borehole water is to be used, it is important to take samples of this water and send to your nearest water analysis lab for professional analysis. The data from the water analysis will help you determine what water treatment protocol will be necessary for your system. The data from the water analysis can be used to assist you in your decision making.

Contact kuulsupport@portacool.com for assistance on determining how much bleed-off water is required to prevent scale build up.

3 WATER CIRCULATION REQUIREMENTS AND PLANNING

In order to fully understand the requirements of the entire system, the following section deals with how much water Kuul® evaporative media needs to operate efficiently.

3.1 Kuul evaporative media water needs

3.1.1 Water for evaporation and washing the evaporative media

The water evaporated from the Kuul evaporative media surface to cool the air is a small percentage of the total recirculated water required for your system. The largest percent of water used is required to wash the evaporative media of salts, as well as to rinse the evaporative media of dust and debris that may have filtered from the air pulled through the evaporative media.

The evaporative media, when wet, has a typical air-filtration capacity close to an EU-3 standard air filter, so it is important to clean this dirt from the evaporative media, if pre-filtration is not used. Debris pulled from the air will form heavy silt and mud on the evaporative media surface and in the sump/reservoir if not taken care of with adequate rinsing/washing.

Further, the additional "washing" water is also used to remove the deposited salts left behind on the media as water is evaporated. This reduces scale formation and prolongs media life.

The table below in 3.1.3. is our recommended guideline for how much water to supply to the evaporative media. This is enough water for peak evaporation and for rinsing/washing.

Copyright 2021 © Portacool, LLC

3.1.2 Water for evaporation and washing the evaporative media

Water must be supplied evenly over the top surface of the evaporative media to ensure proper performance and to ensure adequate rinsing/washing water is available over the entire inlet surface. Some recommendations are as follows:

- Use water distribution media to evenly distribute the water supplied by the distribution header pipe. Even if a distribution header pipe has a blockage in some of the holes, the water supplied by the remaining holes will be evenly distributed with the aid of water distribution media, reducing the number of vertical dry streaks.
- Avoid dry-streaks. Every dry streak allows hot air through the evaporative media. If 20 percent of the media surface has dry streaks because of poor water distribution, the efficiency of the evaporative media is reduced by 20 percent. If the evaporative media was designed to operate at 93 percent efficiency at full capacity, the 20 percent of dry-streaks will reduce the performance of the evaporative media to 74.4 percent. What was a 80.5 °F air temperature leaving the evaporative media at 93 percent efficiency, will now become 84.4 °F at 74.4 percent efficiency.
- Not only do dry-streaks reduce performance, they also have no water available for washing. This results in scale formation and dirt and residue deposits. These areas form the base at which algae and scale build-up can occur.
- Install flushing systems to flush the distribution header pipe.
- Install supply water in-line filters from the pump to the water distribution header pipe to avoid larger particles blocking the holes in the distribution header pipe.
- Always have distribution header pipe holes facing upwards to avoid dirt fouling the holes over time.

3.1.3 Table of water supply requirements

Kuul® evaporative media is available for many industries with different designs and requirements.

Please find the table below for your use in designing your system.

Media type	Water required in gallons/min per top surface area in ft^2
Kuul Control™ series	1.7 to 1.9
Kuul Vitality™ series	1.5 to 1.7
Kuul Evolution™ series	1.7 to 1.9

Copyright 2021 © Portacool, LLC

Calculating your media evaporation and rinsing/washing water needs can be done as follows:

EXAMPLE FOR AN AIR HANDLING UNIT SYSTEM:

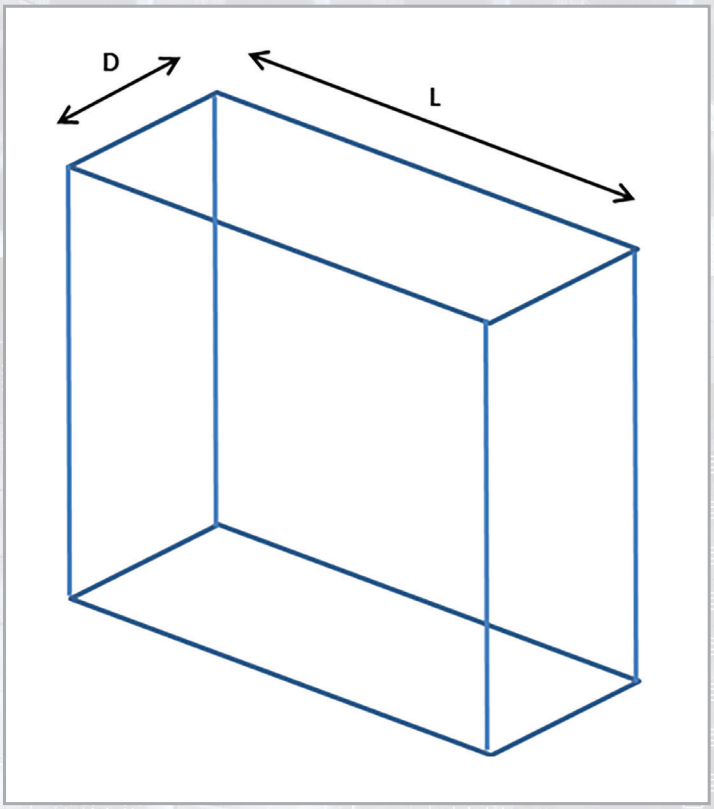

D [ft]	L [ft]	Toparea [ft^2]	Media supply water in gallons/min/ft^2	Total water needed in gallons/min
1	11	11	1.8	19.8

* See chart on previous page

$$(D * L) * V = V_T$$

$$(1 * 11) * 1.8 = 19.8$$

Copyright 2021 © Portacool, LLC

3.2 Specifying a pump for your system

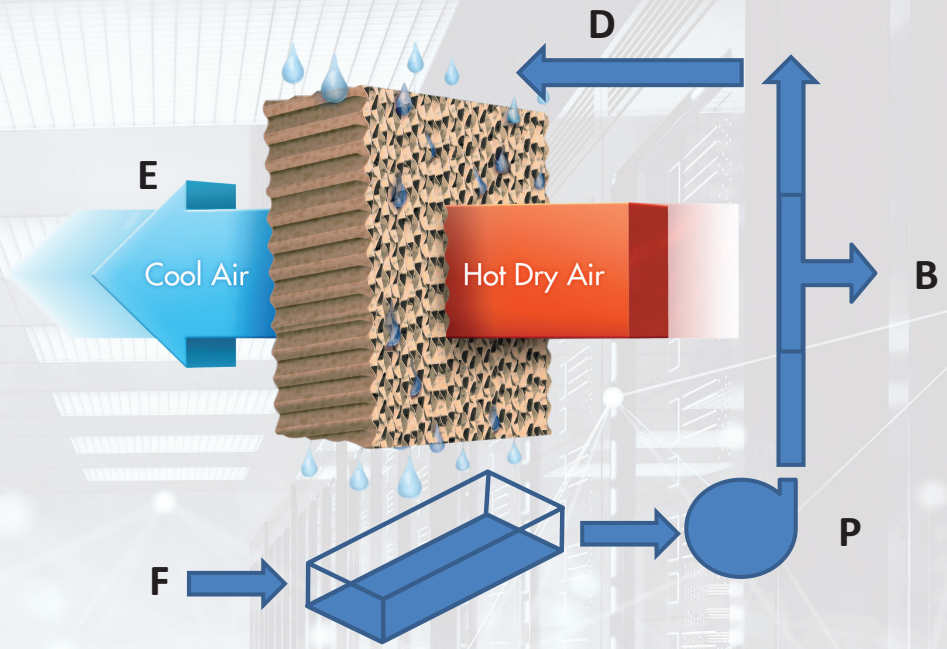

B = Bleed-off

D = Distribution water (evaporation + rinsing/washing)

E = Evaporation

F = Supply water

P = Pump capacity

P (pump capacity) = D (distribution) + B (bleed-off)

As shown in the example above, distribution water is both the evaporation and the rinsing/washing water.

D = 19.8 gallons/min

Evaporation (E) = one air handling unit (AHU) system for one supply. The previous example found a total water consumption for evaporative systems on one AHUs at 124 gallons per hour.

124 = 124 gallons per hour or 2.06 gallons per min

Bleed-off (B) = as an example, we will use 20 percent (specific to water quality) of water evaporated to maintain sump/reservoir concentration, which will be 0.41 gallons per min.

B = E * 0.2 or 2.06 * 0.2 = 0.41

Pump capacity will be P = D + B, which is 19.8 + 0.41 = 21.86 gallons per min at the rated head pressure for the height and friction factor given by the supplier of the water distribution system per running feet of system.

Copyright 2021 © Portacool, LLC

3.3 Installation best practices

A media bank should not exceed 120" (3m) in height. The fundamental reason for this is to ensure enough water is distributed over the media for evaporation and washing/rinsing.

Above 120" (3m) in height, in order to get enough water to the bottom of the media while evaporation is taking place across the entire height as the water travels downwards, the supply quantity of water to the top headers must be increased.

This ensures the entire media bank height gets enough water for evaporation and washing/rinsing, but over-floods the top area of media, resulting in entrainment. If the top supply header water flow is reduced to stop entrainment,
the bottom sections of media are starved of enough water. For this reason, 120" (3m) is the maximum single design height recommended as a single top-supply and bottom-drain system.

The media bank height of 120" (3m) can be split into two pieces of 60" (1.5m) height stacked on top of each other, but with intermediate horizontal T-bars. Media joints with overlapping edges should be avoided in design. This is where water is allowed to leave the surface of the media and drip. If water drips, then the moving air is able to pick it up, resulting in entrainment. The objective is to ensure water remains in contact with the media at all times. The following simple stainless-steel strips cure most of the problems.

Please see the sketch below of proper placement of horizontal T-bars for stacking media on top of each other.

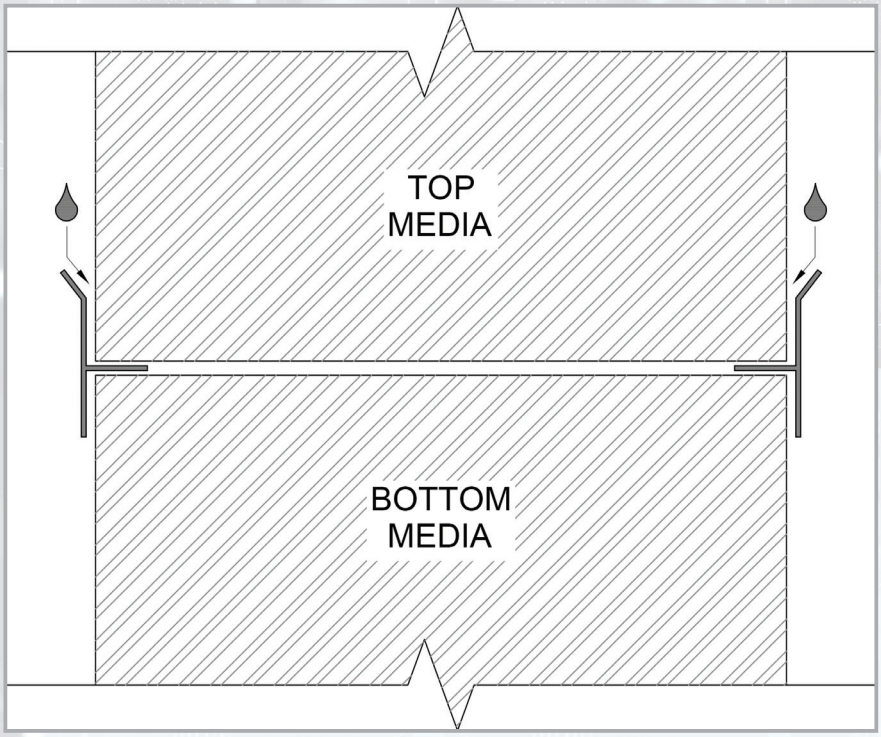

Vertical T-bars for vertical joints where media is inserted where a vertical gap could be present after installation. If a bank should be greater than 120" (3m) in height, then two separate systems need to be installed on top of each other. For the reasons above, two separate systems – top-supply and bottom-drain configurations – must be used.

Copyright 2021 © Portacool, LLC

4 GOOD INSTALLATION PRACTICES — FACTORS INFLUENCING A LONG, USABLE LIFESPAN

4.1 Proximity to sources of contaminants

Evaporative media is a very good air filter when wet. Meaning air-borne dirt and chemical particles are pulled from the air and are left behind on the evaporative media surface to be washed off by the rinse/wash water deposited in the sump or reservoir.

In designing layouts of air-intake areas for Kuul® evaporative media, ensure an exhaust fan from another building or system containing contaminants is not feeding the air-intake.

If air borne pollutants contain fertilizers, this fertilizer is a catalyst for growth of fungi and algae in the water distribution system. In this case, an algaecide dosing system may need to be employed.

4.2 On-off cycling of evaporative media

Switching evaporative media systems on and off with a control cycle that does not allow enough time for the evaporative media to become saturated and washed, means the evaporative media is subjected to dirt and calcium deposits without the time needed for the water to wash off the deposits. Any scale on the evaporative media – either partially dry or totally wet – will foul the media quickly. This reduces the lifespan of the evaporative media.

4.3 Washing cycles for evaporative media

If an on-off cycle control method must be used on your evaporative media, a washing cycle when the system fans are not in use – such as at night – must be implemented. The washing cycle should last a minimum of 30 minutes to properly rinse off dirt and calcium salts deposits.

4.4 Flushing systems, recirculated water filtration

As it is normal for water returning to the sump, reservoir or treatment plant, to contain dirt and deposits, it is important to install a large particle pre-filter to the pump intake as well as a fine filter in-line in the supply system to the evaporative media distribution header pipe. These filters ensure fine impurities do not block distribution header pipe holes.

As mentioned previously, fine particles can settle in the distribution header pipe. This is why discharge holes should always face upwards. A flush valve should be installed in the distribution header pipe to assist with washing silt from the header to the sump. Eventually the dirty sump water will be discharged to waste in the maintenance cycle.

Copyright 2021 © Portacool, LLC

4.5 Preventing algae growth on evaporative media

Using the following tips will assist in keeping your evaporative media free from algae:

- Always keep the necessary volume of rinsing/washing water flowing over the evaporative media.
- Watch for dry streaks. Any issues preventing adequate water flow to the evaporative media should be fixed as soon as possible to eliminate dry streaks.
- Always keep evaporative media clean. Practice the recommended monthly maintenance detailed hereafter.
- If algae shows in fine growth quickly, regularly use an algaecide recommended by Portacool, LLC in the reservoir water or make-up water streams. A permanent solution may also be installed to dose the system continuously with chemical to ensure cleanliness.
- Allow your evaporative media to dry completely once every 24 hours if possible.
- Shade your evaporative media, if possible, without inhibiting airflow. Sunshine or indoor lighting is a necessary component for algae photosynthesis. Shading or switching AHU lights off on your evaporative media will discourage algae growth.
- Flush and clean the evaporative system sump or reservoir regularly. A dumping system equipped with a timer to control automated dumping cycles may also be used.
- Maintain and clean in-line filters or strainers regularly.

5 AUTOMATIC DOSING SYSTEMS TO EXTEND EVAPORATIVE MEDIA LIFESPAN

Automatic dosing systems that protect the evaporative media from scale deposit as well as for algae control assist the maintenance team with preventative measures to ensure cleanliness of the system.

5.1 Scale control

For scale control, the pH is regulated to within six to eight to ensure that even with heavier concentrations of diluted salts from well or borehole water, the evaporative media and water will operate under the point at which scale starts to form. A mild acid solution in careful application may be used to bring high pH levels of 9.0 and higher down to within the 6.0 to 8.0 range.

Copyright 2021 © Portacool, LLC

5.2 Algae and bacterial control

For algae and bacterial growth control, utilize a specific solution of household bleach (Sodium Hypochloride) to be dosed continuously into the make-up water to ensure the water remains clean and living organisms are unable to grow.

	Lime/calcium scale	For organic growth
Action	Household white vinegar (Acetic Acid – CH_3COOH) in ppm	Household bleach (SodiumHypochloride–NaClO)inppm
Shock, cleaning dose	250-260	5-7 ppm in sump/system water
Preventative dose	n/a	1 - 2 ppm in sump/system water

Note: Sump/reservoir water must have pH between 7.0 and 8.5 for the chemistry to work

6 MONTHLY MAINTENANCE NEEDS

It is vital to ensure monthly maintenance activities are carried out. This preventative maintenance regimen ensures the well-being of your evaporative media and promotes longevity.

6.1 Water flow and distribution check

While the system's water distribution pump is running, check that:

- Water is being distributed evenly over the evaporative media
- Volume of water flow over the evaporative media is adequate to completely saturate the evaporative media
- The water distribution system is free of any restrictions
- The holes in the distribution header pipe are free and clear of obstruction

6.2 Filtration check

The water system should have a coarse filter/strainer on the inlet side of the pump to protect the pump. The system should also have a fine filter/strainer after the pump to remove additional debris and protect the holes in the distribution header pipe from blockages.

Be sure to clean these filters/strainers regularly by switching off the water distribution pump, then opening and cleaning the coarse pump filter/strainer and then the fine water distribution filter/strainer.

Copyright 2021 © Portacool, LLC

6.3 Check for organic and calcium salt deposits

In order to prevent long-term, stubborn difficult-to-remove deposits, check the evaporative media regularly for algae growth and/or calcium deposits. These checks should be done weekly and can assist with planning for the next shutdown period.

6.4 Flushing the system and checking the water quality

Evaporative media is capable of filtering a large amount of dust in a two week period. In addition to the material filtered from the air, calcium salts will remain behind after the water is evaporated away with adequate washing. These materials will accumulate in the system's sump/reservoir.

The sump/reservoir water should be drained and refilled if water is dirty or if evaporative media is showing evidence of algae growth and scale deposits.

If your evaporative system has a flush valve to rinse the distribution header pipe for sediment that has settled out, open the valve and let the circulation water flush the pipe.

6.5 If water pH is high

Check the pH of the fresh water. If the pH level is above 8, it is recommended to conduct a thorough water analysis and investigate a dosing regimen for algae and scale control discussed in section five.

6.6 If the pH is neutral

If the pH is neutral – between 6.5 and 7.5 – simply dosing the water sump/reservoir with the required algae and scaling control chemicals recommended by Portacool, LLC in section 5 will suffice.

6.7 Shock dosing the water for scale and algae control

In extreme cases, a strong shock dose may be required to adequately control scale and algae growth.

- Ensure the system fans are shut down and air is not being pulled through the evaporative media.
- Ensure the sump water has been changed and the sump is clean.
- With a portable pH meter, ensure the pH of the sump/reservoir water is between 6.5 and 7.5 for the shock dosing as a preventative measure for scale and algae control. If the pH is out of this recommended range the chemicals added will be ineffective on scale and algae.

Copyright 2021 © Portacool, LLC

7 TREATMENT OF OLD EVAPORATIVE MEDIA — CLEANING AND MAINTENANCE

The following methods may be employed to remove organic growth and calcium salt deposits to rejuvenate older evaporative media.

7.1 Algae treatment

To remove old algae:

- Ensure the system fans are switched off and there is no air being pulled through the evaporative media.
- Follow the maintenance steps mentioned previously to ensure the system water, filters and distribution header pipes are clean.
- With the system sump/reservoir full with clean water, switch off the supply water.
- Using the information in section 5.2 or 11, select the proper shock-dose for your sump.
- Pour the selected quantity of household bleach (Sodium Hypochlorite – NaClO) into the system sump/reservoir taking care not to spill it on yourself or clothing. Refer to the SDS of the household bleach.
- **Do not overdose the system. Use only the recommended dosage.**
- Turn on the system water pump and allow the dosed water to flow over the evaporative media for a period of 6 hours. Ensure the fans remain off during this entire process.
- After six hours, switch off the pump. Flush the sump and refill with fresh water.
- Ensure the pump is turned **off** and no water is being distributed across the evaporative media, then turn the fans on to allow the evaporative media to completely dry during a hot day for two to three hours. This will allow the dead algae to lift and curl away from the evaporative media surface. Once the algae has dried, use a soft bristle brush to gently brush the surface of the evaporative media in a downwards direction, allowing the larger algae pieces to be brushed away.
- Turn the pump distribution valves to 'waste' in order to flush the system. Wet the evaporative media with a gentle flow of water from a hose and repeat the process of using the brush to brush away the smaller pieces of algae.
- With the media now clean, clean out the sump and water filters once more before using your system.

Copyright 2021 © Portacool, LLC

7.2 Treatment for scale/calcium deposit

The method of removing scale/calcium deposits can be done as follows:

- Ensure the system fans are switched off and there is no air being pulled through the media.
- Follow the maintenance steps mentioned previously to ensure the system water, filters and distribution header pipes are clean.
- With the system sump/reservoir full with clean water, switch off the supply water.
- Using the information in section 5.2 or 11, select the proper dosage amount to shock-dose your sump.
- Pour the selected quantity of household vinegar (Acetic Acid – CH_3COOH) into the system sump/reservoir taking care not to spill it on yourself or clothing.
- **Do not overdose the system. Use only the recommended dosage.**
- Turn on the system water pump and allow the dosed water to flow over the evaporative media for a period of 6 hours. Ensure the fans remain off during this process.
- After six hours, with the pump still on use a soft bristle brush to gently brush the surface of the evaporative media in a downwards direction, allowing the calcium scale crystals to dissolve with the flow of the water and the use of the soft brush. Continue brushing until all scale has been removed.
- Turn the pump distribution valves to 'waste' to flush the system. With the evaporative media wet, use a gentle flow of water from a hose and brush to wash off the any remaining small scale deposit pieces.
- With the evaporative media now clean, flush out the sump and water filters once more before using your system.

8 AGGRESSIVE, CORROSIVE AND TOXIC CLEANING AGENTS

Many chemicals available in the market to clean evaporative media are harmful to the evaporative media, as well as the environment.

Cleaning your Kuul Evolution™ evaporative media with a chemical not recommended by Portacool, LLC may seriously harm the longevity of the evaporative media, softening the evaporative media to the point of collapse. This weakening will lead to the evaporative media needing to be replaced.

Additionally, many chemicals on the market are also highly corrosive, which may not only damage the evaporative media but can damage metal – such as pipes and fittings – in your water distribution system.

At Portacool, LLC the preservation of our environment is important. We carefully select cleaning materials that biodegrade and are safe to the environment.

Copyright 2021 © Portacool, LLC

9 RECOMMENDATIONS FOR YOUR KUUL CONTROL™ EVAPORATIVE MEDIA SYSTEMS

DO

- Calculate the correct size pump for your evaporative cooling system.
- Always ensure you have good water distribution over your evaporative media.
- Avoid dry streaks on your evaporative media.
- Allow your evaporative media to dry out completely once every 24 hours.
- Check your water quality and analyze for high pH and scaling properties.
- Use a pH control dosing system if your pH is too high.
- Maintain your evaporative media regularly and shock-dose with household bleach (Sodium Hypochlorite – NaClO) for algae and/or household white vinegar (Acetic Acid – CH_3COOH) for lime descaling if necessary.
- Use a bleed-off or sump/reservoir dumping system to control salt concentration in order to prevent scaling.
- Use in-line water filters in your distribution headers.
- Always ensure the distribution header-pipe holes face upwards.
- Install a flushing system to keep the distribution headers clean.
- Shade your evaporative media from the sun if possible.

DON'T

- Don't use chemicals that are harmful to the evaporative media and environment. Only use Portacool, LLC recommendations.
- Don't use frequent on-off water cycles on the evaporative media.
- Don't allow heavy algae growth and scale deposits to form. Conduct preventative measures regularly.
- Don't miss monthly maintenance cycles.

Copyright 2021 © Portacool, LLC

10 CIRCULATION WATER REQUIREMENTS TABLE FOR KUUL® EVAPORATIVE MEDIA

Evaporative media type	Water required in gallons/min per top surface area in ft^2
Kuul Control™ series	1.7 to 1.9
Kuul Vitality™ series	1.5 to 1.7
Kuul Evolution™ series	1.7 to 1.9

11 ALGAECIDE AND DE-SCALING DOSING REQUIREMENT TABLE

System water capacity for dosing			Scale control	Hygiene control
Water volume of system in [gallons]	Volume of buffer tank [gallons]	Total volume of water in [gallons]	Amount of household white vinegar (Acetic Acid – CH_3COOH) in gallons	Amountofhouseholdbleach (Sodium Hypochlorite – NaClO) in ounces
26	132	159	0.8	3.9
40	132	172	0.9	4.2
53	132	185	0.9	4.5
66	132	198	1.0	4.8
79	264	343	1.8	8.4
92	264	357	1.8	8.7
106	264	370	1.9	9.0
119	264	383	2.0	9.3

Note: Reservoir water must be between 6.5 and 7.5 pH for the chemistry to work properly.

Copyright 2021 © Portacool, LLC

12 REPLACEMENT CONSIDERATIONS

With good water and good maintenance, extended life can be experienced. However, not all installations have the luxury excess water for washing and salt control, which leads to scale creation. In this scenario, the maintenance team could calculate the increase cost of owning old media with reduced performance vs that of replacing the media.

Result of ageing media	Problem	Consequence	Motivation to change
Decline in saturation efficiency %	Loss of cooling power of system	Not able to meet supply temperature or humidity	Loss of compliance
Increase in pressure drop	Higher system pressure for supply fans	Increase in energy consumption	New media pays for energy reduction
Heavy scaling	Higher system pressure for supply fans	Higher media air-speed	Water carry-over

13 DRY AND WET WEIGHT/DENSITY FOR KUUL EVAPORATIVE MEDIA

	Media size	Dry media		Wet media	
	H x W x D (inch)	Weight of media in lb	Density of media in lb/ft^3	Weight of media in lb	Density of media in lb/ft^3
Kuul ViTech™	60 x 12 x 6	3.66	1.47	7.08	2.83
Kuul Origin™	60 x 12 x 12	6.91	1.38	16.71	3.34
Kuul MicroTech™	60 x 12 x 4	3.23	1.94	7.81	4.69
Kuul FirePro™	60 x 12 x 12	6.46	1.29	32.13	6.43

Copyright 2021 © Portacool, LLC

14 WATER DISTRIBUTION BEST PRACTICES

Good water distribution practice Kuul™ Media

The focus of good water distribution is to ensure even water distribution over the top surface area. This avoids overloading part of the media and starving the balance of the area.

1. Divide depth of media equally to position the header in the center. Zone A=B=C.
2. The header or umbrella for 12" deep media section should therefore be 4" deep.
3. Ensure umbrella distributes on each of its edges, front and back, 4" apart.
4. Umbrella pipe must always face upwards to ensure holes do not get blocked.
5. Umbrella pipe holes must not jet water downwards as this forces uneven water distribution.
6. Umbrella pipe holes should be no more than 3" apart, at no less than 1/8" in diameter.
7. Use water distribution media to assist with distribution in the left to right orientation.
8. Ensure the media orientation is correct with the steeper angle facing the air stream.
9. Ensure the pump capacity is correct with the correct head pressure calculation.

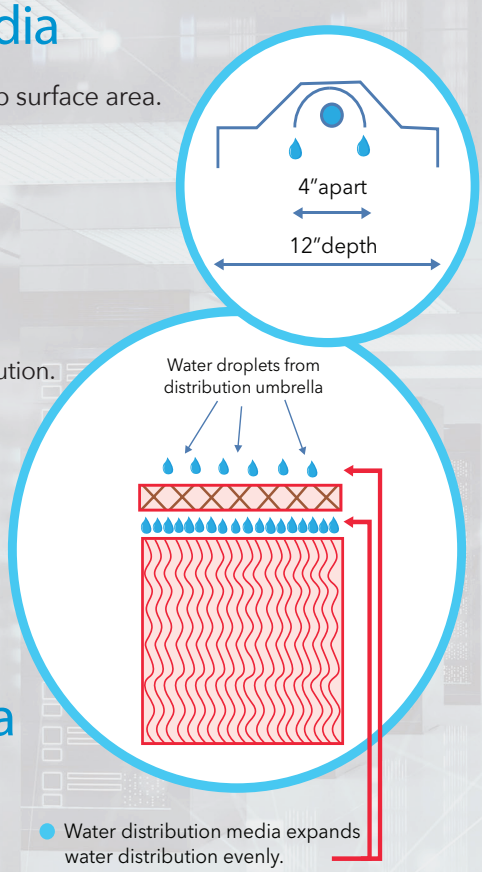

The purpose of the water distribution media

1. To evenly distribute the drops from the distribution header umbrella.
2. To slow down heavy flow and distribute water left to right in the media.
3. To ensure no dry streaks occur if a hole is blocked in the header.
4. Even water distribution assists with good media washing and maintenance.

Distributionofwaterthroughmedia

Zone A: Initial water flows down 45 degree to air on edge, for cleaning and counter flow supply.

Zone B: Water down 45 moves downward at flute contact points and then spreads inside media paper, through internal fiber transport.

Zone C: Finally water flows through media in media fiber internally to outside edge, assisted also with air flow.

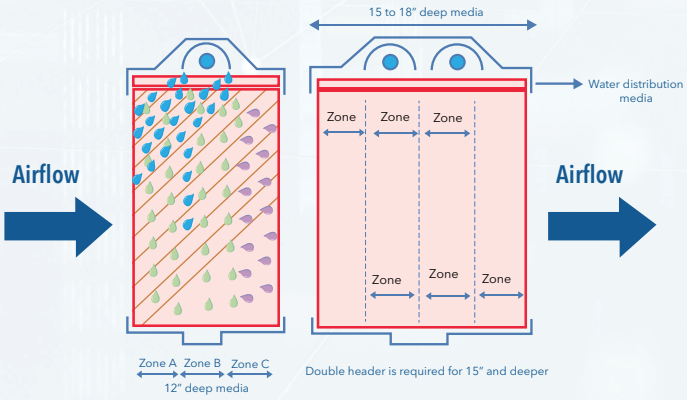

Copyright 2021 © Portacool, LLC

PORTACOOL.

THE HOME OF KUUL™

Kuul® evaporative media is a product of Portacool, LLC and is designed and manufactured in Center, Texas.

Kuul Evolution™ evaporative media is a premier line of specialized evaporative media that provides enhanced cooling performance via a unique trifecta of superior raw materials, a proprietary application of geometrical, intelligent design and exclusive manufacturing processes. We use only the highest quality plant-based fiber materials and manufacture all components of this line in our Center, Texas, United States manufacturing facility. Kuul Control evaporative media can be customized to your exact specifications by one of our Kuul specialists.

WWW.THEKUULEFFECT.COM

MADE IN USA

WITH DOMESTIC AND GLOBAL PARTS

Copyright 2021 © Portacool, LLC